REVISIONS				
ZONE	REV	DESCRIPTION	DATE	APPROVED
	A	FITTINGS UPDATED	09DEC02	

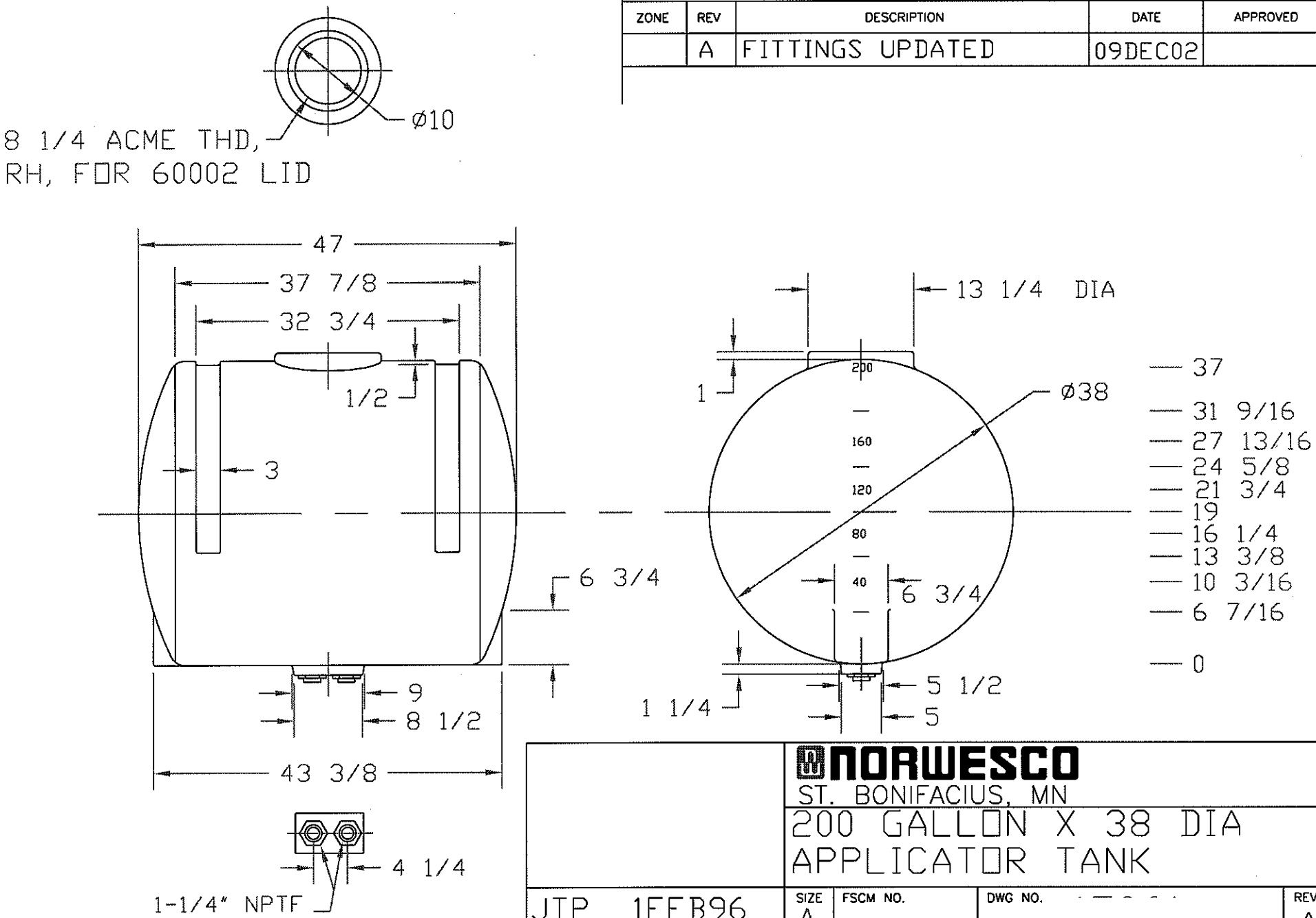

NORWESCO
ST. BONIFACIUS, MN

200 GALLON X 38 DIA
APPLICATOR TANK

JTP 1FEB96	SIZE A	FSCM NO.	DWG NO.	REV A
	SCALE 1/16		SHEET	